ITEM	PART NO.	DESCRIPTION	SABUT	SABU	SABU10	SABU12	WEIGHT
1	XAU01	ANGLE, CROSSOVER, 1.9-3.5" X 1.9-3.5" OD	2	2	2	2	2.98 LBS
2	SAB.01	FORMED CLAMP	2	2	2	2	1.36 LBS
3	GD04600	1/2"-13 UNC x 6" Galv Threaded Rod (A307)	2	2	2	2	0.33 LBS
4	GD04800	1/2"-13 UNC x 8" Galv Threaded Rod (A307)	2	2	2	2	0.44 LBS
5	GWF04	1/2" GALV USS FLAT WASHER	8	8	8	8	0.04 LBS
6	GWL04	1/2" GALV LOCK WASHER	8	8	8	8	0.013 LBS
7	GN04	1/2"-13 UNC GALV HEX NUT (GR.5)	8	8	8	8	0.04 LBS
8	GB04265	1/2-13 UNC X 2-3/4" GALV HEX BOLT KIT (GRADE 5)	1	1	1	1	0.20 LBS
9	GB04145	1/2-13 UNC X 1-1/2" GALV HEX BOLT KIT (GRADE 5)	1	1	1	1	0.13 LBS
10	OS15034	3/4" X 1-1/2" OFFSET COLLAR	1	1	1	1	0.14 LBS
11	SCP10	1.5" - 3.5" O.D. CLAMP HALF	1	1	1	1	1.21 LBS
12	PCC4	CROSSOVER CLAMP KIT, 4"	-	1	1	1	6.20 LBS
13	MT546126	∅2.875" O.D. X 10'6" (126") STRUCTURAL TUBE	-	-	1	-	37.21 LBS
14	MT546150	∅2.875" O.D. X 12'6" (150") STRUCTURAL TUBE	-	-	-	1	44.29 LBS

REVISIONS				
REV.	ZONE	DESCRIPTION	BY	DATE
A		INITIAL RELEASE	ACG	04/21/23
B		UPDATE PIPE SIZE FROM 2-3/8" O.D.	ACG	09/28/23
C		UPDATE HARDWARE TO SAE GRADE 5	ACG	09/04/24

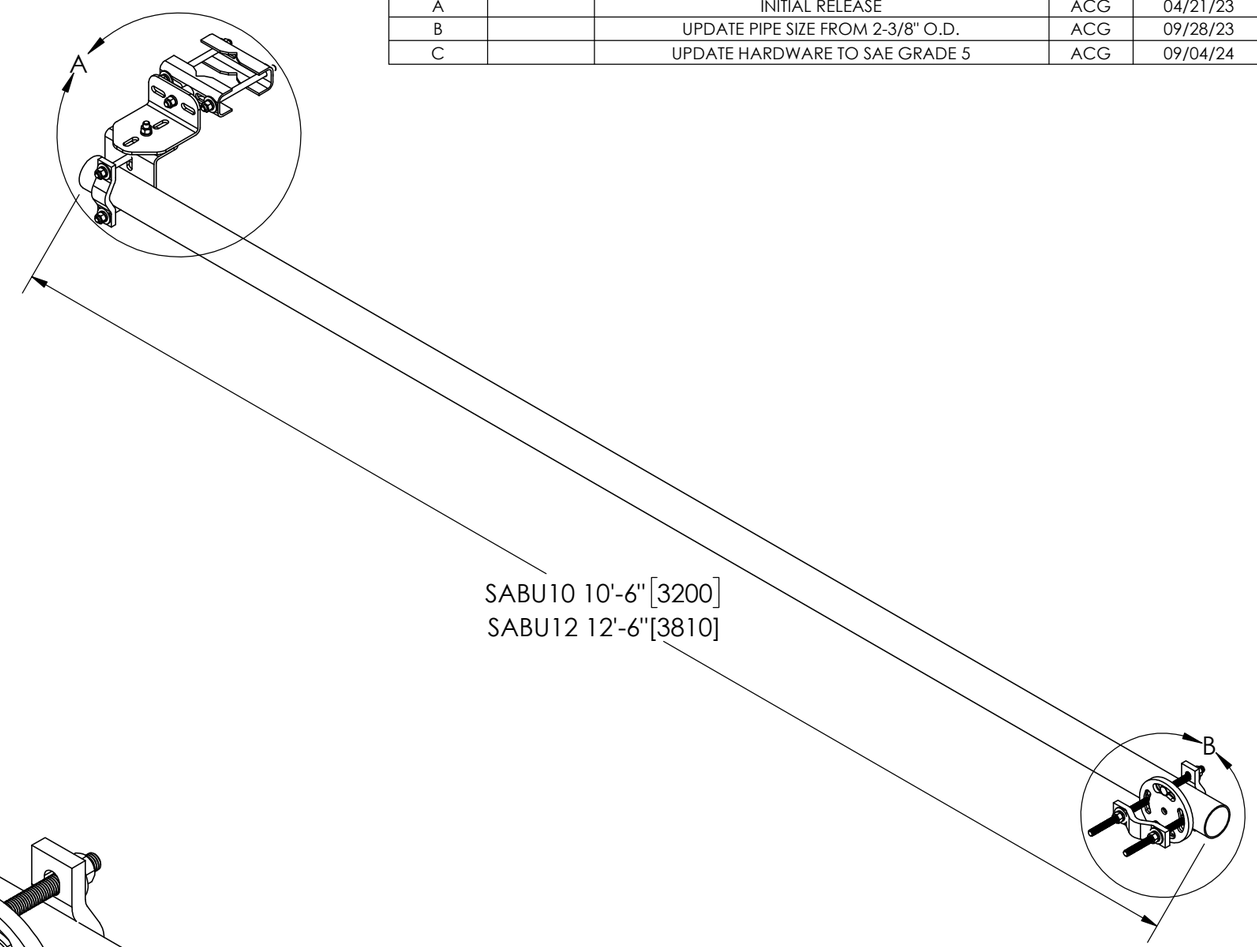

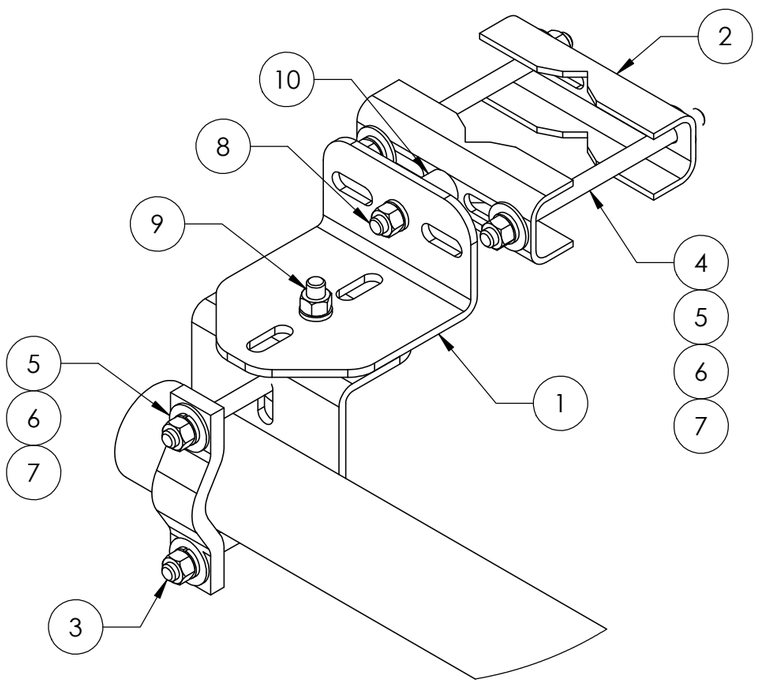

DETAIL A
SCALE 1 : 4

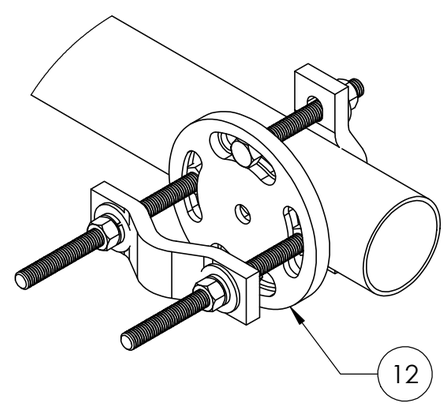

DETAIL B
SCALE 1 : 4

SABU SERIES TABLE					
PART NUMBER	DESCRIPTION	PIPE	PIPE DESCRIPTION	QTY	WEIGHT
FM-SABUT	STIFF ARM KIT (TOWER SIDE)	N/A	N/A	0	12.8 LBS
FM-SABU	STIFF ARM KIT (NO PIPE)	N/A	N/A	0	19.0 LBS
FM-SABU10	STIFF ARM KIT, 10'	MT546126	2-7/8" O.D. X 126" PIPE	1	56.0 LBS
FM-SABU12	STIFF ARM KIT, 12'	MT546150	2-7/8" O.D. X 150" PIPE	1	63.1 LBS

NOTES:
1. ALL METRIC DIMENSIONS ARE IN BRACKETS.

These drawings and specifications are proprietary property and may be used only for the specific purpose authorized in writing.

ALL DIMENSIONS ARE IN INCHES U.O.S.
TOLERANCES UNLESS OTHERWISE SPECIFIED:
.X = ± .06 ANGLES ±2°
.XX = ± .03 FRACTIONS ±1/32
.XXX= ± .010
REMOVE BURRS AND BREAK EDGES .005

DO NOT SCALE THIS PRINT

DRAWN BY: ACG	SHEET: 1 of 1	PART NUMBER: FM-SABU SERIES
CHECKED BY: MKV	SCALE: NTS	DESCRIPTION: UNIVERSAL STIFF ARM KIT
DATE: 04/21/23	MATERIAL: ASTM A36 & A500	DRAWING TYPE: ASSEMBLY DRAWING
REVISION: C	FINISH: ASTM A123	FIMO
	WEIGHT	